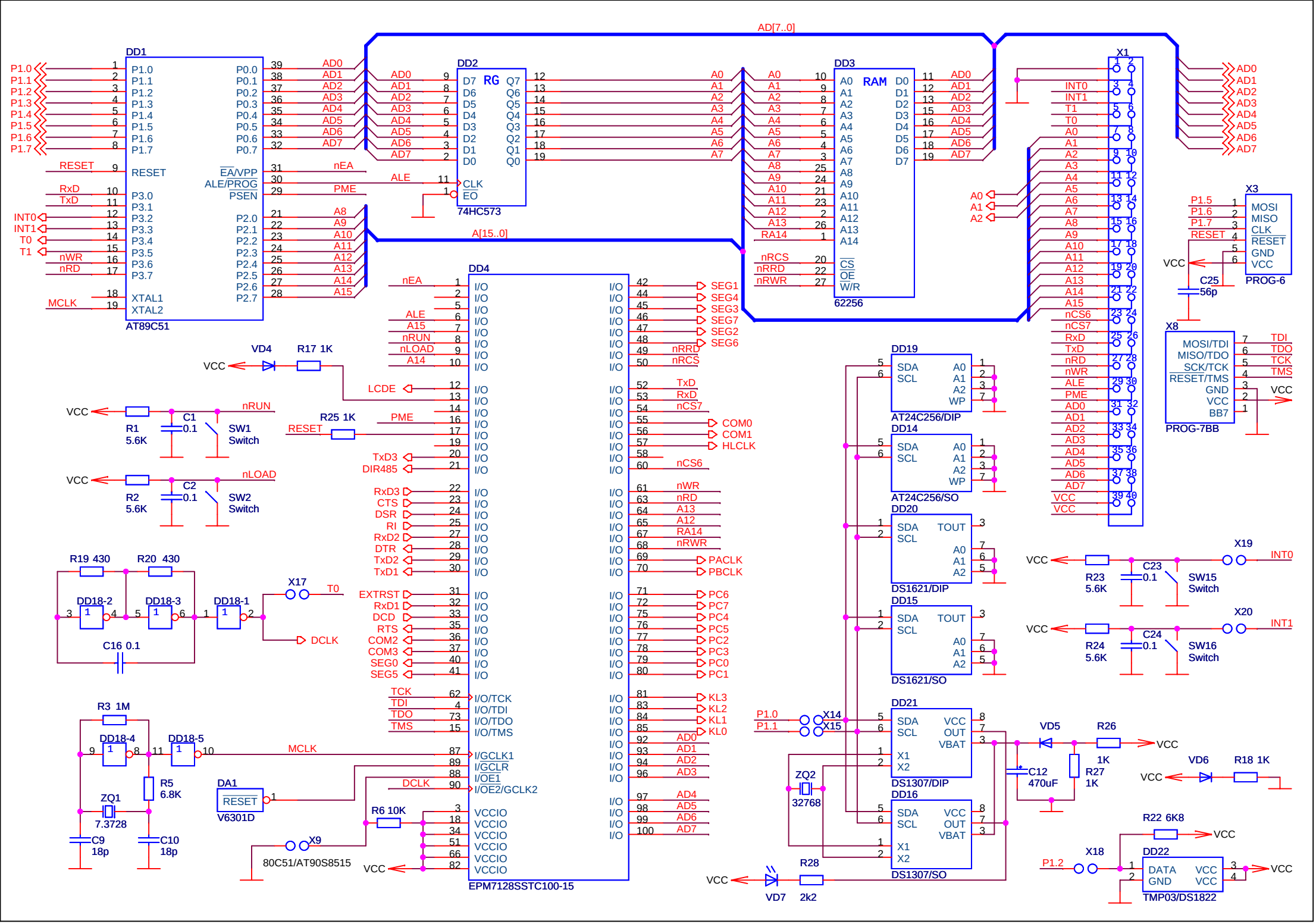
AD[7..0]
A[15..0]
DD1
AT89C51
P1.0
P1.1
P1.2
P1.3
P1.4
P1.5
P1.6
P1.7
RESET
RxD
TxD
INT0
INT1
T0
T1
nWR
nRD
MCLK
P0.0
P0.1
P0.2
P0.3
P0.4
P0.5
P0.6
P0.7
EA/VPP
ALE/PROG
PSEN
P2.0
P2.1
P2.2
P2.3
P2.4
P2.5
P2.6
P2.7
XTAL1
XTAL2
DD2
74HC573
RG
CLK
EO
DD3
62256
RAM
CS
OE
W/R
RA14
nRCS
nRRD
nRWR
X1
X3
PROG-6
MOSI
MISO
CLK
GND
VCC
C25
56p
X8
PROG-7BB
MOSI/TDI
MISO/TDO
SCK/TCK
RESET/TMS
BB7
TDI
TDO
TCK
TMS
DD4
EPM7128SSTC100-15
nEA
ALE
nRUN
nLOAD
LCDE
PME
TxD3
DIR485
RxD3
CTS
DSR
RI
RxD2
DTR
TxD2
TxD1
EXTRST
RxD1
DCD
RTS
COM2
COM3
SEG0
SEG5
TCK
TDI
TDO
TMS
MCLK
DCLK
SEG1
SEG4
SEG3
SEG7
SEG2
SEG6
COM0
COM1
HLCLK
nCS6
PACLK
PBCLK
PC6
PC7
PC4
PC5
PC2
PC3
PC0
PC1
KL3
KL2
KL1
KL0
VD4
R17 1K
R1
5.6K
C1
0.1
SW1
Switch
R2
5.6K
C2
0.1
SW2
Switch
R25 1K
R19 430
R20 430
DD18-2
DD18-3
DD18-1
C16 0.1
X17
R3 1M
DD18-4
DD18-5
R5
6.8K
ZQ1
7.3728
C9
18p
C10
18p
DA1
RESET
V6301D
R6 10K
X9
80C51/AT90S8515
DD19
AT24C256/DIP
DD14
AT24C256/SO
DD20
DS1621/DIP
DD15
DS1621/SO
DD21
DS1307/DIP
DD16
DS1307/SO
SDA
SCL
TOUT
VCC
OUT
VBAT
X1
X2
ZQ2
32768
C12
470uF
VD5
R26
1K
R27
1K
VD6
R18 1K
R22 6K8
DD22
TMP03/DS1822
DATA
GND
X18
P1.2
X14
X15
P1.0
P1.1
VD7
R28
2k2
X19
X20
R23
5.6K
R24
5.6K
C23
0.1
C24
0.1
SW15
Switch
SW16
Switch
INT0
INT1

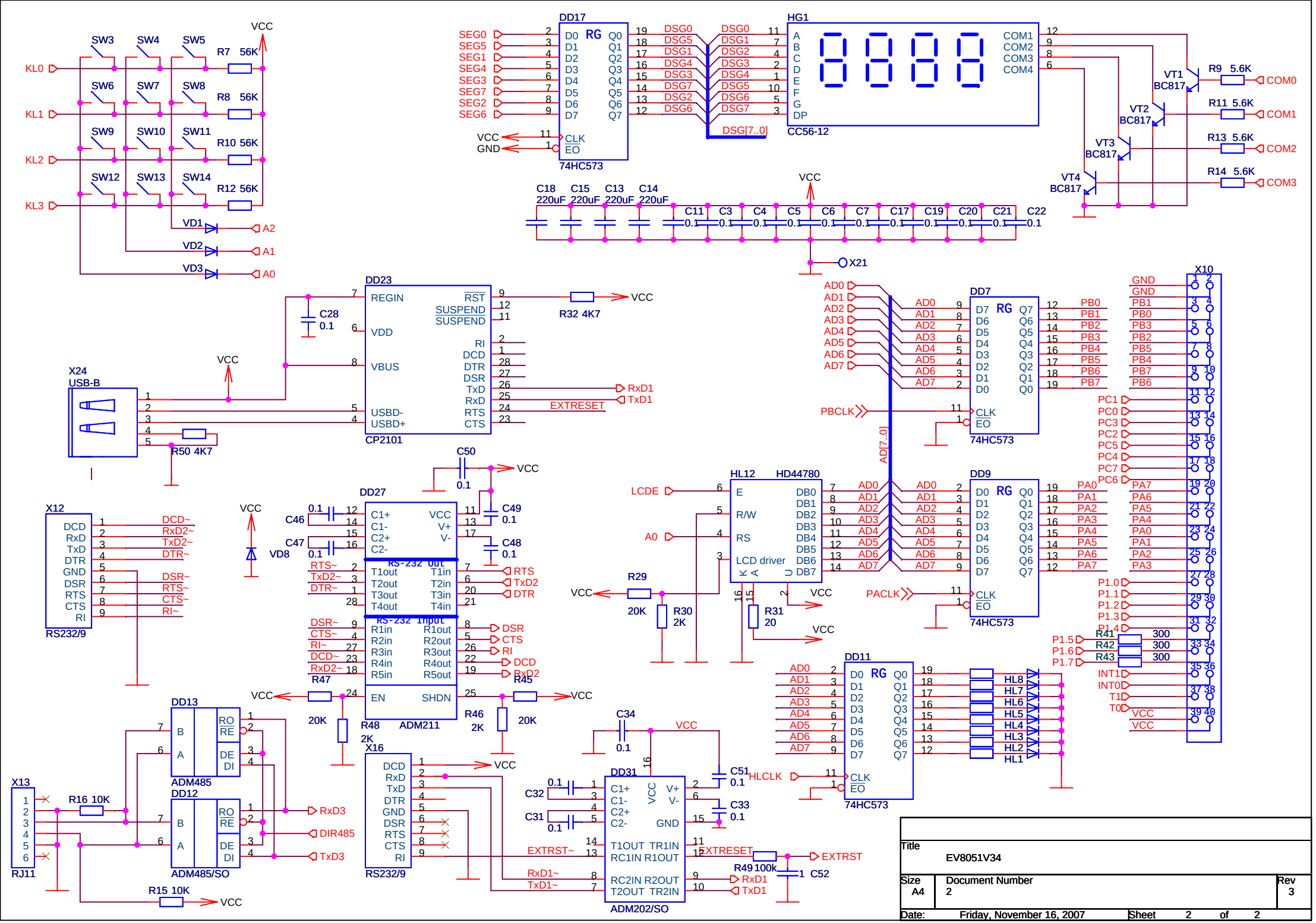
DD17
74HC573
HG1
CC56-12
VT1 BC817
VT2 BC817
VT3 BC817
VT4 BC817
R9 5.6K
R11 5.6K
R13 5.6K
R14 5.6K
COM0
COM1
COM2
COM3
SW3 SW4 SW5 SW6 SW7 SW8 SW9 SW10 SW11 SW12 SW13 SW14
R7 56K
R8 56K
R10 56K
R12 56K
KL0
KL1
KL2
KL3
VD1
VD2
VD3
A2
A1
A0
C18 220uF
C15 220uF
C13 220uF
C14 220uF
X21
DD23
CP2101
REGIN
VDD
VBUS
USBD-
USBD+
RST
SUSPEND
RI
DCD
DTR
DSR
TxD
RxD
RTS
CTS
EXTRESET
R32 4K7
C28 0.1
X24
USB-B
R50 4K7
DD7
74HC573
DD9
74HC573
X10
HL12
HD44780
LCD driver
LCDE
A0
R29 20K
R30 2K
R31 20
PBCLK
PACLK
AD[7..0]
DD27
ADM211
RS-232 out
RS-232 input
C46 0.1
C47 0.1
C48 0.1
C49 0.1
C50 0.1
R47 20K
R48 2K
R45 20K
R46 2K
X12
RS232/9
VD8
DD13
ADM485
DD12
ADM485/SO
X13
RJ11
R16 10K
R15 10K
RxD3
DIR485
TxD3
X16
RS232/9
C34 0.1
DD31
ADM202/SO
C32 0.1
C31 0.1
C51 0.1
C33 0.1
EXTRST~
RxD1~
TxD1~
EXTRESET
EXTRST
R49 100k
C52
DD11
74HC573
HLCLK
HL8
HL7
HL6
HL5
HL4
HL3
HL2
HL1
R41 300
R42 300
R43 300
INT1
INT0
T1
T0
Title
EV8051V34
Size A4
Document Number 2
Rev 3
Date: Friday, November 16, 2007
Sheet 2 of 2